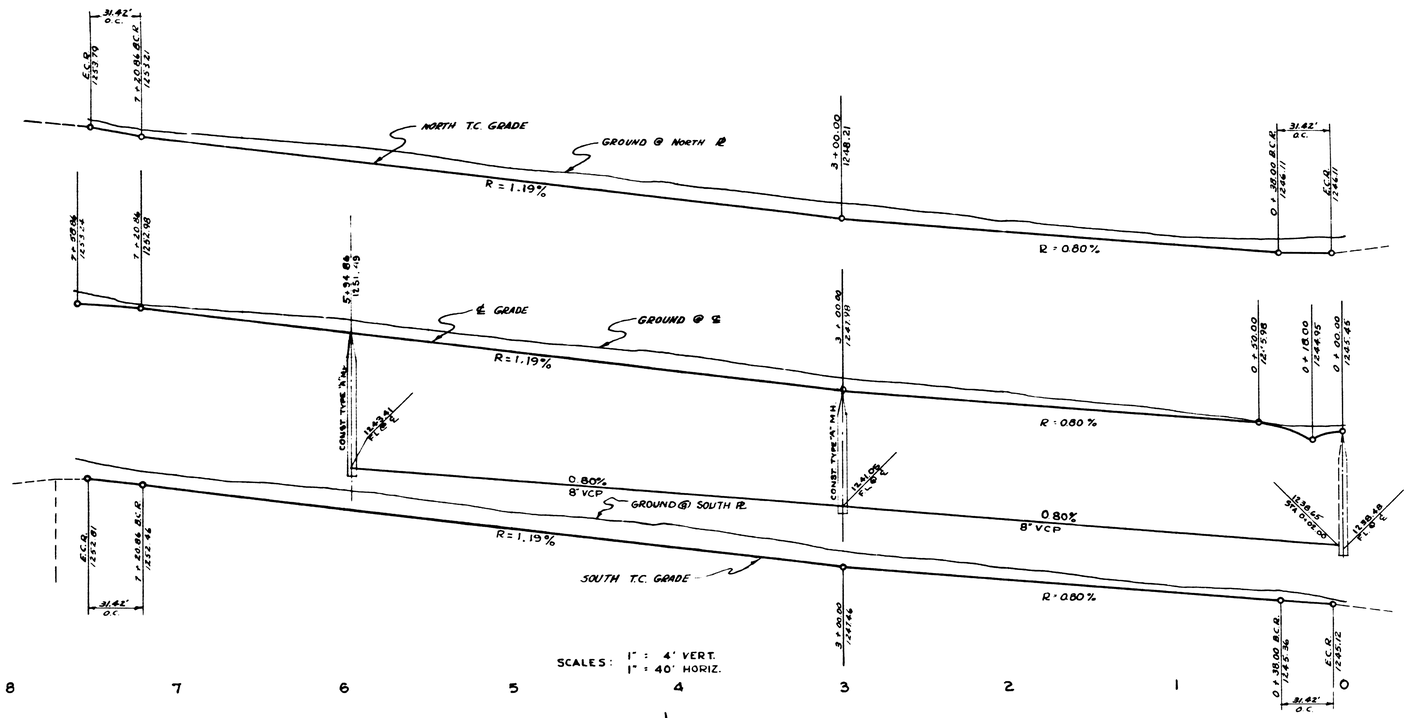

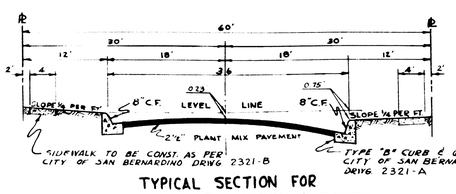

TYPICAL SECTION FOR
MAPLE & UNION STREETS
PER CITY OF SAN BERNARDINO DRWG. 2321-D

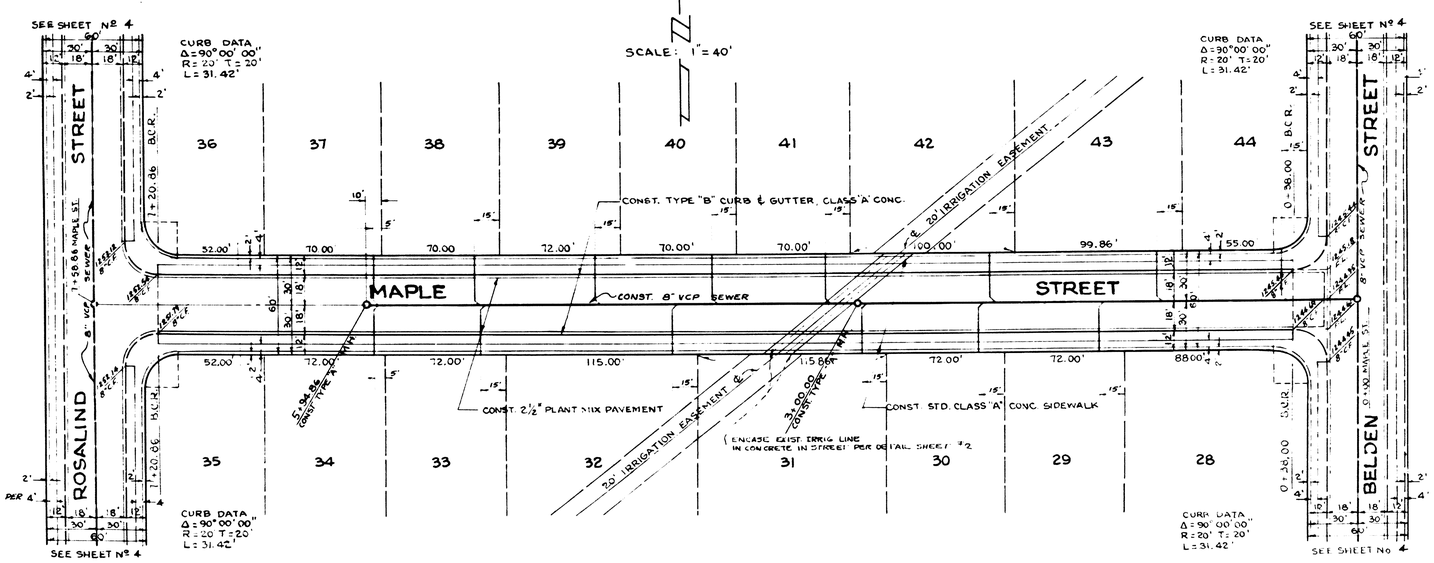

TRACT NO. 5013
SHEET 5 OF 6 SHEETS
DWRG. Nº 2557

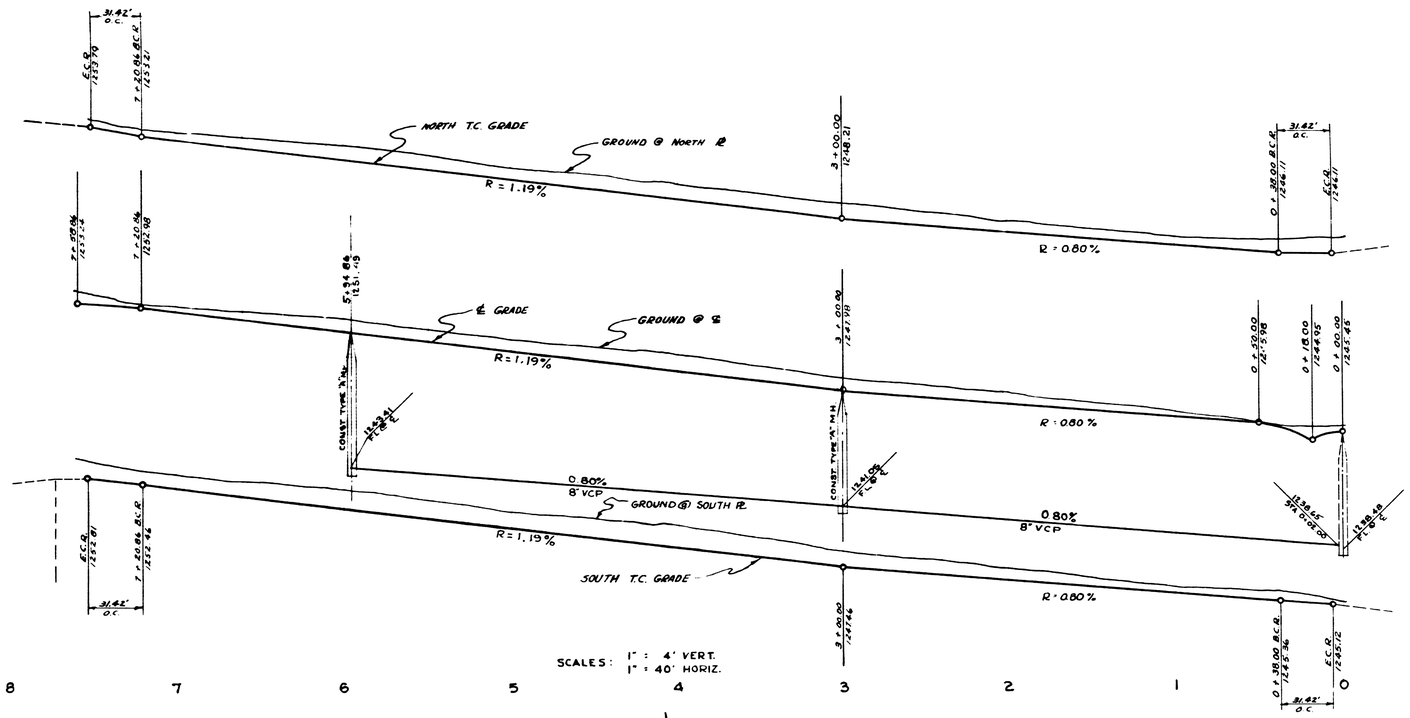

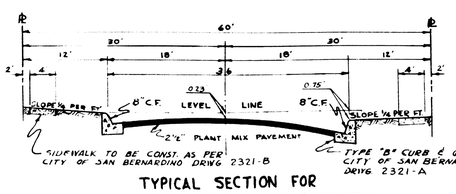

TYPICAL SECTION FOR
MAPLE & UNION STREETS
PER CITY OF SAN BERNARDINO DRWG. 2321-D

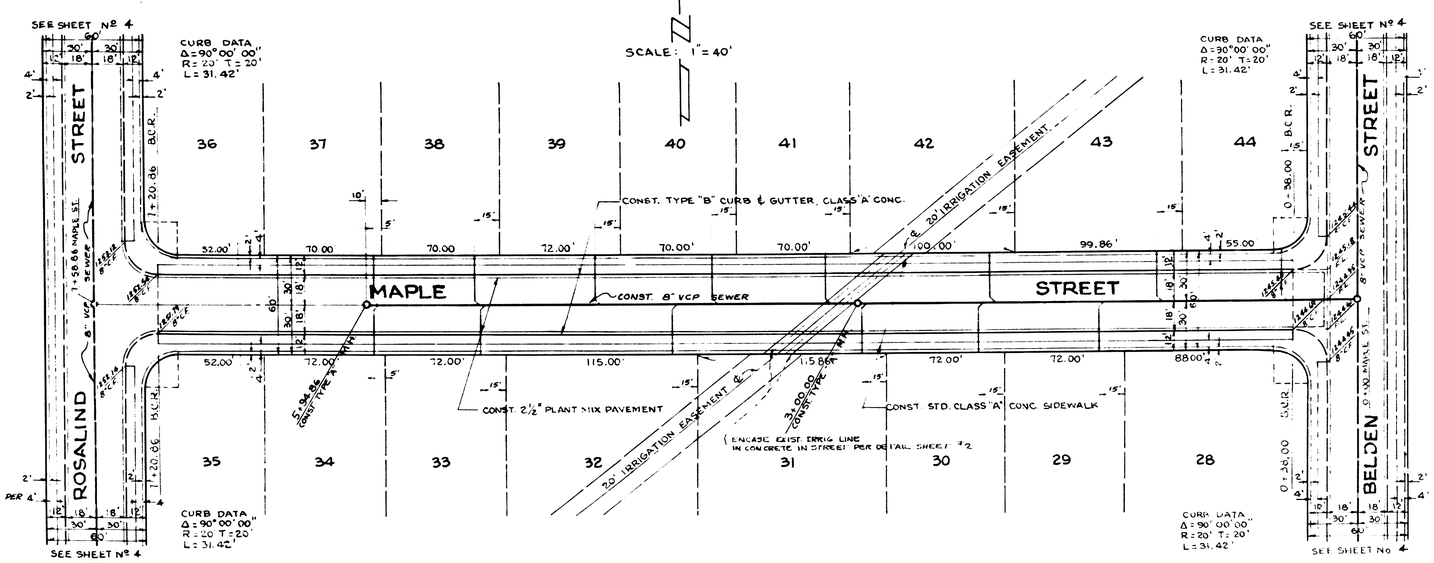

TRACT NO. 5013
SHEET 5 OF 6 SHEETS
DWRG. Nº 2557